Product Name:
9” LED PIR Sensor Panel Light

LS26-PIR9"-18W-MS

Product Specification
Light source: SMD2835 LED
LED Quantity: 88x2
Voltage/ Frequency: 120V AC/60Hz
Power: 18W
Lumens: 1260lm
CCT: 3CCT Switch
(3000K/4000K/5000K)
PF: ≥0.7
CRI: >80
Lifetime: 50000 hours
Beam Angle: 110°
Dimmable: Yes

Features
9 inch PIR Sensor Panel Light.
Indoor use only.
Suitable for damp locations.
This device is not intended for use with emergency exits.

Product Code	COLOR	CCT	VOLTAGE	WATT	LUMEN	EFFICIENTCY	Beam Angle
LS26-PIR9" -18W-MS	WHITE	3CCT (3000K/4000 K/5000K)	120V	18W	1260lm	70lm/w	110°

	BOX SIZE	Units per case	Package dimensions	Shipping Weight
LS26-PIR9"-18W-MS	240*230*47MM	20PCS/Carton	502*263*484MM	14.6KG

Warning

Switch off the power before replacing down light.
All goods will be guaranteed for 3 years in normal use from date of original purchase.
Improper use (wrong voltage, wrong power supply, wrong dimmer etc) will not be guaranteed.
For quality problem, we will send free replacements for bulbs or other spare parts as requested together with next order.
For damaged goods, you need to inform us within three days after receiving the goods. We will send you replacement spare parts (bulbs) or help to claim from the forwarder.

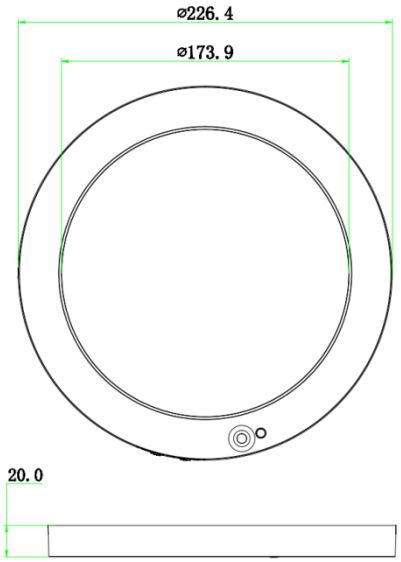

Easy to Install in 3 Easy Steps:

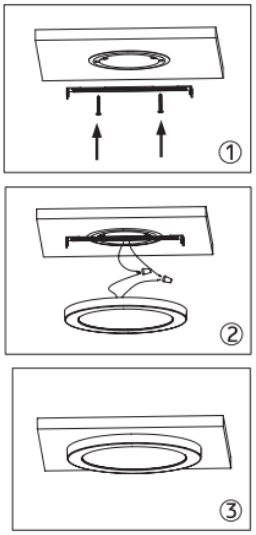

Step1: Fix the installation bracket

Step2: Connecting the wire

Step3: Press the light to fit the bracket

Size: 227X20MM / 5.5X0.78 Inch

Product Applications